CITY OF MERCED
SITE PLAN APPROVAL COMMITTEE
REVIEW APPLICATION

Planning and Permitting, 678 W. 18th Street, Merced, CA 95340 (209) 385-6858
FAX: (209) 725-8775

(as provided in Section 20.68)

City of Merced – All principal permitted uses in I-H (Heavy Industrial), I-L (Light Industrial) and I-R (Industrial Administration and Research) zoned districts shall be reviewed by the Site Plan Review Committee.* The purpose of site plan approval is to determine compliance with this ordinance and to promote the orderly and harmonious growth of the city of Merced, the stability of land values and investments, the general welfare, and to help prevent the impairment or depreciation of land values and development by the erection of structures or additions or alterations thereto without proper attention to siting.

SUBMITTAL REQUIREMENTS

For information regarding the fee for Site Plan Approval and Environmental Determination, and environmental filing fees with Merced County and the California Department of Fish and Game (as applicable), refer to the following documents on the City's web site at: www.cityofmerced.org:

Planning and Development Fee Schedule
Important Notice re: All New Development Applications

5 Copies of completed detailed site plans showing all structures, parking, storage and landscape areas (see typical commercial site plan requirements).
2 Copies of project elevations.
1 Copy of completed application.
1 Each reduced site plan and elevation (8 ½ x 11")
1 Copy of Environmental Review Checklist

GENERAL DESCRIPTION OF PROJECT

Name of Firm: _____ Type of Business: _____

Location of Project: Street Address: _____

Assessor's Parcel No.: _____

Legal Description: _____

_____

_____

Project Description: _____

_____

_____

PROJECT INFORMATION

Zoning: _____ Acres of Site: _____

Existing Use: _____

Proposed Use: _____

Number of Structures: _____ Square Feet: _____

Type of Structures: _____

Adjoining Land Uses (include uses across streets):

North: _____

East: _____

South: _____

West: _____

Grading (amount of dirt/fill material being moved): _____

Number of Trees on Site: _____

Number of Employees: Total _____

On Largest Shift: _____

Anticipated Incremental Development: _____

Anticipated Schedule for Development: _____

SITE PLAN APPROVAL COMMITTEE

Members: Director of Development Services
City Engineer
Chief Building Official
(or their designee)

The Site Approval Committee, in reviewing site plans for principally permitted uses requiring site plan approval, may require, as a condition of approval, special landscaping or appearance features, including but not limited to, decorative walls/fences, berms and special plantings, as well as special requirements relating to circulation, access and parking.

Site plan determinations by the Site Plan Approval Committee may be appealed to the Planning Commission in writing within five days from the date of notification to the applicant (MMC 20.68.090) and to the City Council if the Planning Commission should deny the project (MMC Chapter 20.96).

_____	_____
APPLICANT'S SIGNATURE	OWNER'S SIGNATURE
_____	_____
APPLICANT'S NAME (Printed)	OWNER'S NAME (Printed)
_____	_____
ADDRESS	ADDRESS
_____	_____
PHONE	PHONE
_____	_____
FAX/E-MAIL	FAX/E-MAIL

PROJECT TITLE: _____

PROJECT NO.: _____ FILE NO.: _____ FEES: _____

DATE RECEIVED: _____ RECEIPT NO.: _____ BY: _____

*PRE-APPLICATION REVIEW CHARGE may be assessed on any request to consider a particular piece of property for development activity, including change of zoning, preliminary site plan or site design review, preliminary review of a subdivision layout, or as otherwise determined by the Planning Director. This charge will be credited against any application deposit subsequently received from the applicant for the subject project.

CITY OF MERCED
Site Plan Approval Committee

RESOLUTION #79-1 (AMENDED NOVEMBER 21, 1980)

WHEREAS, the Merced City Site Plan Approval Committee met on October 18, 1979, and considered the possibility of simplifying consideration of site plan approval applications in the City of Merced; and,

WHEREAS, the Merced City Site Plan Approval Committee made the following findings:

1. In considering site plan approval applications in the City of Merced, approval is often subject to numerous conditions, a number of which are applicable to nearly all such permits.

2. Many conditions of approval are simply extracted from existing codes and ordinances and, consequently, are repetitive and redundant.

3. Several conditions included in approval of site plan approval applications are standard Engineering and Recreation & Parks conditions.

4. It would be advantageous to include all "standard" conditions as described above in a separate resolution which would apply to all future site plan approvals. Adoption of such a policy would help to minimize staff time (typing, proofreading, reproduction, etc.), as well as developer and committee review time.

NOW, THEREFORE, BE IT RESOLVED that the Merced City Site Plan Approval Committee does approve the following conditions, which shall hereafter be referred to as "Standard Site Plan Approval Conditions" and which shall become a part of approval of each site plan approval application in the City of Merced unless otherwise approved:

1. All proposed buildings or warehouses shall be completely enclosed structures with construction and structural details to be approved by the City Planning and Engineering Departments.

2. Trash collection points shall be placed outside the proposed building setbacks, exact location and design of trash areas to be approved prior to issuance of building permits pursuant to Section *8.04.050 of the Merced Municipal Code.

3. All outdoor lighting shall be directed away from all street frontages and adjoining properties or shielded to prevent light spillage onto adjoining properties.

*Previously Section 13.10.

4. All roof-mounted equipment and vents shall be painted to blend with roof materials.

5. Detailed landscape and sprinkler plans, including trees, shrubs, and ground covers, and incorporating foundation and peripheral plantings, along with screening of parking areas, shall be approved by the Planning Department prior to the issuance of building permits. All landscaping shall be installed prior to occupancy and shall thereafter be maintained acceptably to these standards.

6. Unless otherwise provided, street trees shall be planted 40 feet on center across the frontage of the property, consistent with Recreation & Parks Department standards.

7. All property not occupied by paving or landscaping (i.e., side yards and rear yards) shall be maintained to acceptable standards for health, fire safety, and aesthetic reasons; grasses and weeds shall be kept to a minimum or as otherwise required by the Planning Department and the County Health Department.

8. Notwithstanding all other conditions, all construction and improvements shall be in strict accordance with zoning, building, and all other codes, ordinances, standards, and policies of the City of Merced.

9. Signing shall conform to Section 8.202I of the Merced City Zoning Ordinance. Computation of square footage shall include all painted signs on all buildings. Proposed developments located within the Airport Industrial Park shall also conform to signing requirements of the Merced Airport Industrial Park Covenants.

Upon motion by Committee Member Block, seconded by Committee Member Stroud, and passed by voice vote.

Adopted this 18th day of October, 1979.

Philip W. Block

Chairman, Site Plan Approval Committee
City of Merced, California

On November 21, 1980, the Site Plan Approval Committee added the following condition:

10. An approval by this committee shall be for a period of one (1) year, beginning with the date of meeting of the committee unless specified otherwise in the resolution. After one year, Site Plan approval shall be deemed expired if a valid building permit has not been issued for a project, unless written request for extension has been received and is approved by the committee. Conditions may be modified or expanded, and new conditions may be added, during any consideration for extension of an existing approval.

GENERAL SITE PLAN REQUIREMENTS MERCED CITY PLANNING DEPARTMENT

JOHN A. DOE FOR ACME, INC. DATE SCALE: (REDUCED) ⚠ NORTH

Site plans must show:

1. Title block (name of applicant and date drawn)
2. Scale and north arrow
3. Property lines and dimensions of lot
4. Locations of existing and proposed buildings
5. Proposed use of all buildings
6. Street locations, widths and purposes
7. Easement locations, purposes and widths
8. Location of existing and proposed access, driveways and curb cuts
9. Location of existing and proposed parking spaces and widths
10. Fence locations
11. Sign locations
12. Landscaping (see also "Detailed Landscape and Sprinkler Plans Info." available from Planning Dep't.)

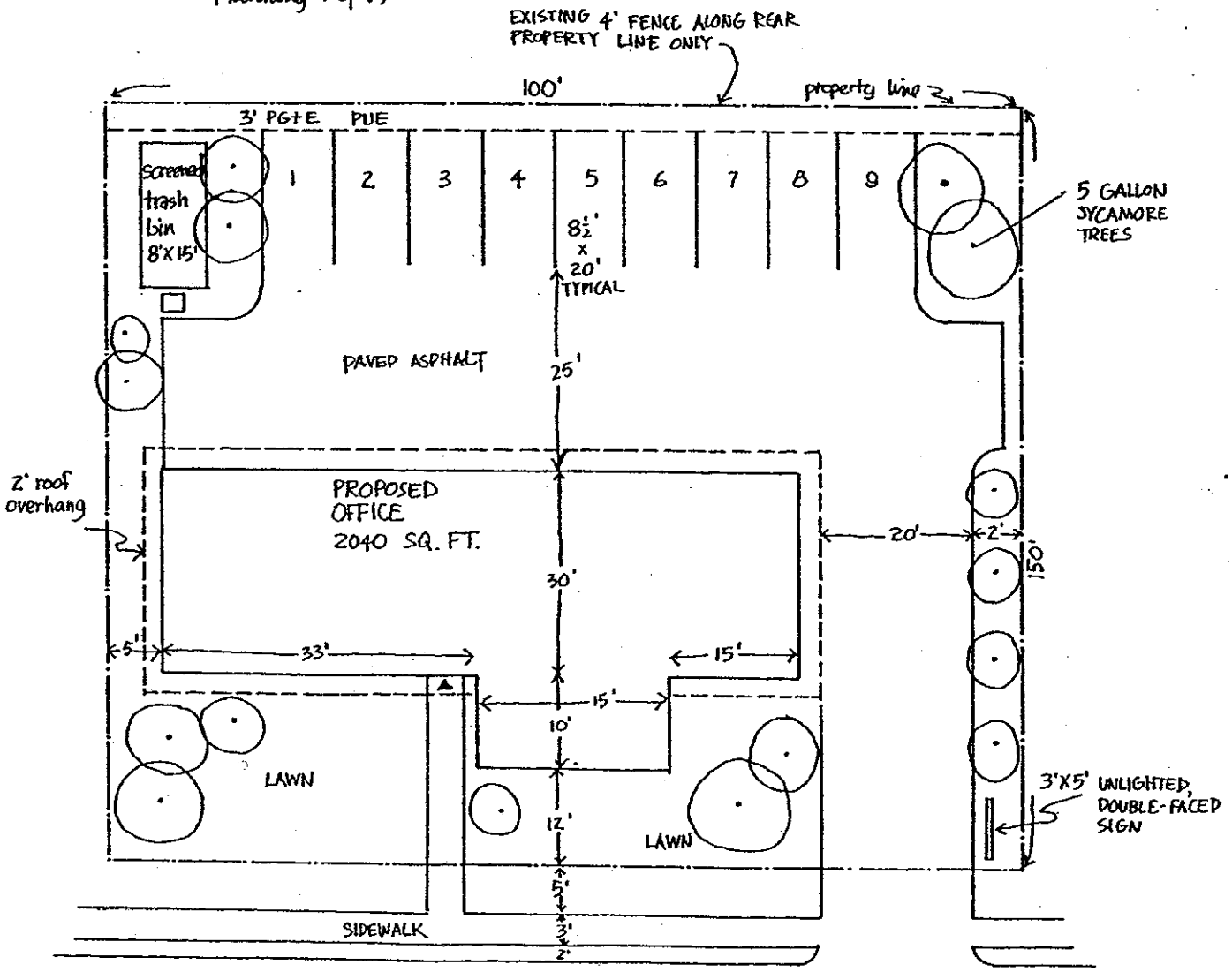

STREET "A" 60' R/W COLLECTOR STREET

City of Merced's Solar Policies

Merced would like to encourage you to help us save energy through the use of solar design in your project. We have adopted seven policies regarding solar use. These are listed on the reverse side for your convenience.

SOLAR DESIGN IS EASY AND ECONOMICAL

Basic solar design is both easy and economical. Three main ways of using the sun are available today. These are: ACTIVE, PASSIVE, and HYBRID systems.

ACTIVE SYSTEMS

ACTIVE systems usually include a solar collector, a distribution component, and a storage component. Small ACTIVE systems are mainly used for domestic water heating and swimming pool heating. These smaller systems are very cost effective and can be included in most projects in Merced. (We hope that your project will include them!) Larger ACTIVE systems can be used for space heating and other uses, although they are less cost effective.

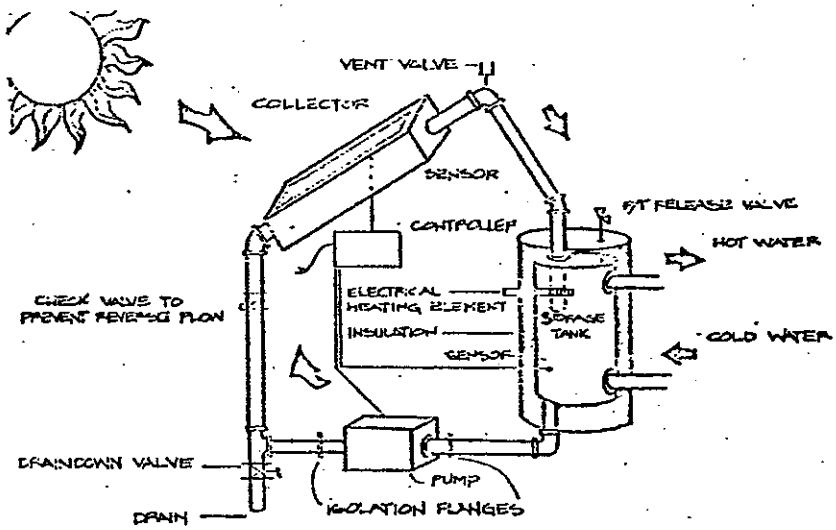

Active Water Heating System

PASSIVE SYSTEMS

PASSIVE systems have great energy-saving potential in Merced. They can add little or no cost to your project. PASSIVE design takes into consideration the sun's altitude in the sky during different seasons. In winter, the sun's rays can be trapped by a structure similar to the "greenhouse effect." MASS (water, concrete, brick, etc.) within the building stores the heat for release during the night and cloudy days. Additional insulation, double glazing, and so on, can make it even more efficient. During summer, when the sun is high in the sky, the sun's rays are blocked from entering the structure while the MASS within helps to moderate high summer temperatures. This makes air conditioning much more economical and sometimes unnecessary! Structure and lot orientation are important ingredients to successful PASSIVE systems. Most times, new subdivisions and apartment complexes can be oriented to maximize PASSIVE solar use with no loss in lots or units and minimal or no increase in costs (see reverse side).

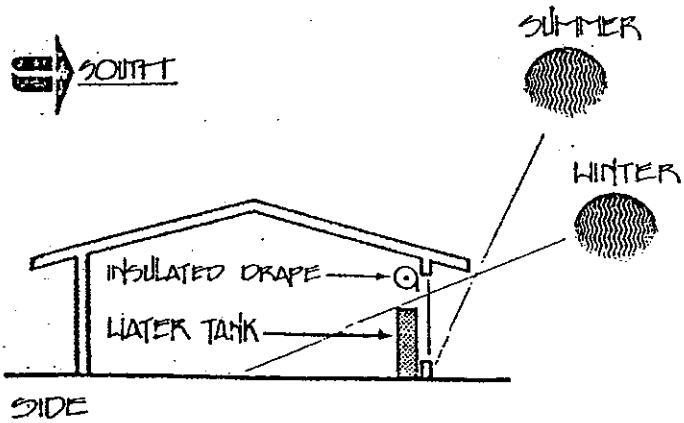

Passive Space Heating System

HYBRID SYSTEMS

HYBRID systems are combinations of ACTIVE and PASSIVE systems. Many economical ways can be devised to combine ACTIVE and PASSIVE designs to minimize energy use.

TAX CREDITS

Don't forget, both federal and state tax laws allow substantial credits for solar systems!

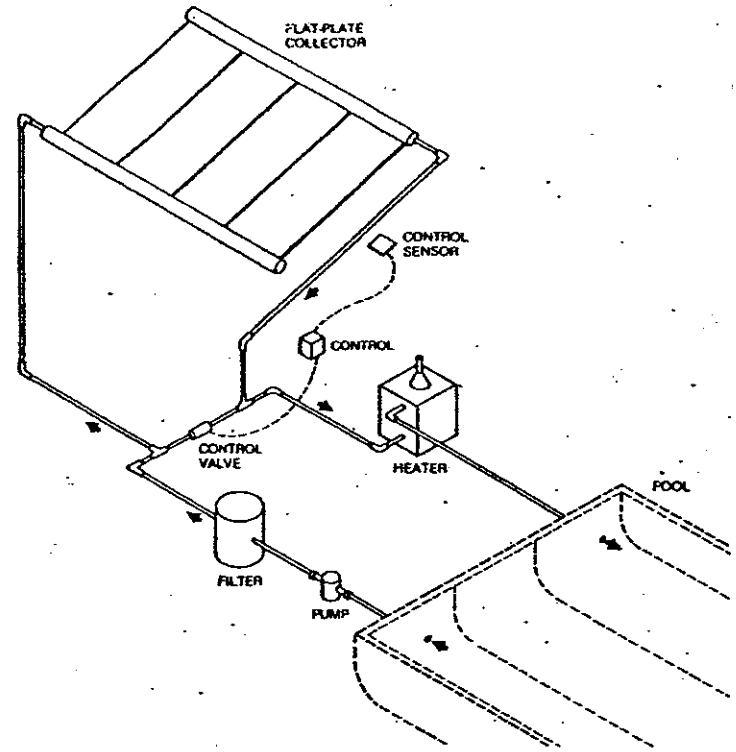

Schematic of a solar pool heating system. When the control sensor detects sufficient sunshine, the control valve routes the circulating water through the collector.

Swimming Pool Heater

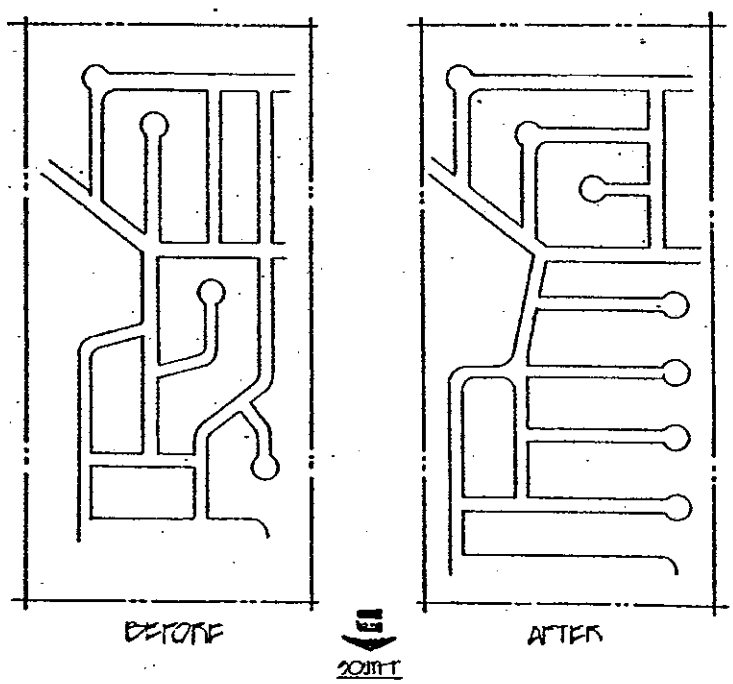

A subdivision reoriented with more lots in a north-south direction.

SOLAR ENERGY CONSERVATION POLICIES

1. Encourage all developers and builders to carefully consider the use of solar energy in design and management of all new construction in the City.

2. Require all new subdivisions to maximize to the extent feasible proper orientation of lots with regard to solar utilization.

3. Encourage developers and builders to properly design all structures on each building lot in the City to take fullest advantage of solar use in heating and cooling.

4. Encourage developers and builders to offer solar hot water heating systems as an option on new facilities.

5. Encourage developers and builders to maximize "passive" solar design, such as large south-facing windows for winter heat gains and overhangs and shading for summer heat protection.

6. Require where feasible the use of solar energy design on all new City facilities, including passive design and active water heating and space heating systems.

7. Pursue further investigation of potential benefits utilizing building code revisions, smaller streets, solar access rights, and other energy-saving techniques.

Adopted by the Merced City Council on August 6, 1979.

ROBERT L. HART, Mayor
CAROL GABRIAULT, Mayor Pro Tem
TOM ARCHER, Councilman
CAROLYN GOINGS, Councilwoman
NORMAN HERMAN, Councilman
SAMUEL C. PIPES, Councilman
JOSEPH G. TRUDEL, JR., Councilman