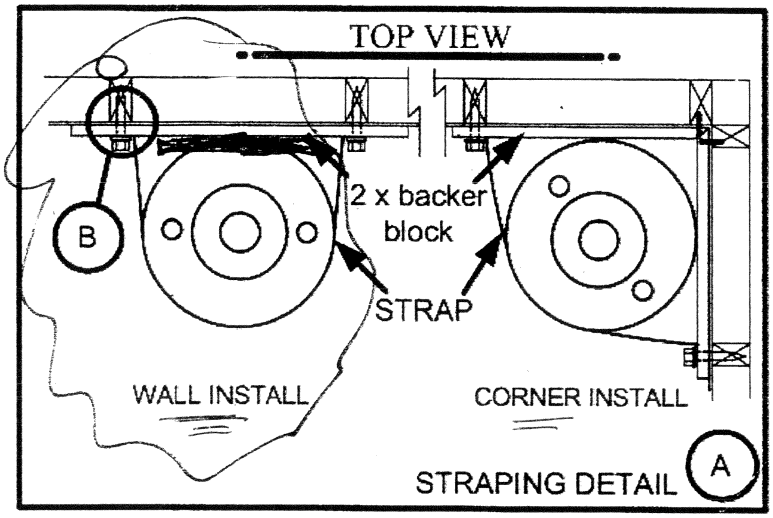

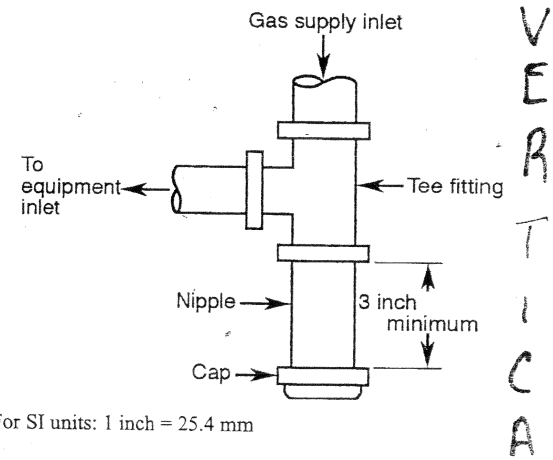

For SI units: 1 inch = 25.4 mm

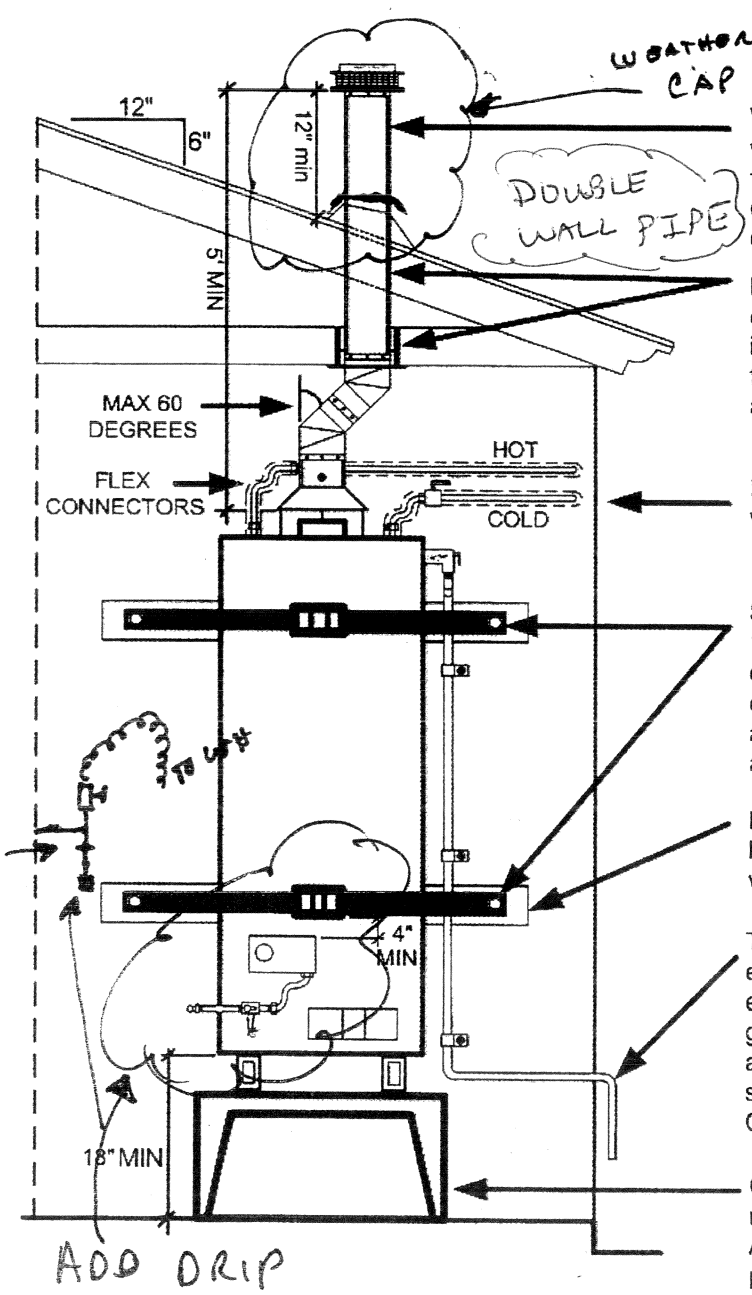

Venting for the water heater shall be Type B (double wall) vent pipe and shall terminate at least 5 feet above the draft hood or flue collar and at least 12" above roof. (steeper pitched roofs will require additional clearances)

Provide minimum 1" clear space from vent to any combustible materials. When type B water heater vent is installed in an attic, provide approved ceiling thimble for the double wall vent. NO single wall vents allowed in attic.

Insulate pipes (hot & cold) within the first 5' feet of the water heater.

Strapping shall be within the upper 1/3 and the lower 1/3 of the water heater. At the lower point, a minimum distance of 4" inches shall be maintained between the controls and the lower strap. Other methods may be acceptable, check with the Building Inspector. See strap and lag detail above.

Provide a 2 x backer block top and bottom behind water heater for support if there is no stud directly behind the water heater. See detail (A)

Temperature and pressure (T&P) relief valve piping shall extend from the valve to the outside of the building with end of pipe not more than 24" nor less than 6" from the ground. Other methods and locations may be acceptable, check with the Building Inspector. Piping shall be of galvanized steel, hard-drawn copper or CPVC.

Gas water heaters in residential garages must be a minimum of 18" above the floor to the burner device. Additionally, water heaters installed in garages shall be protected so as to not be subject to physical damage by a moving vehicle.